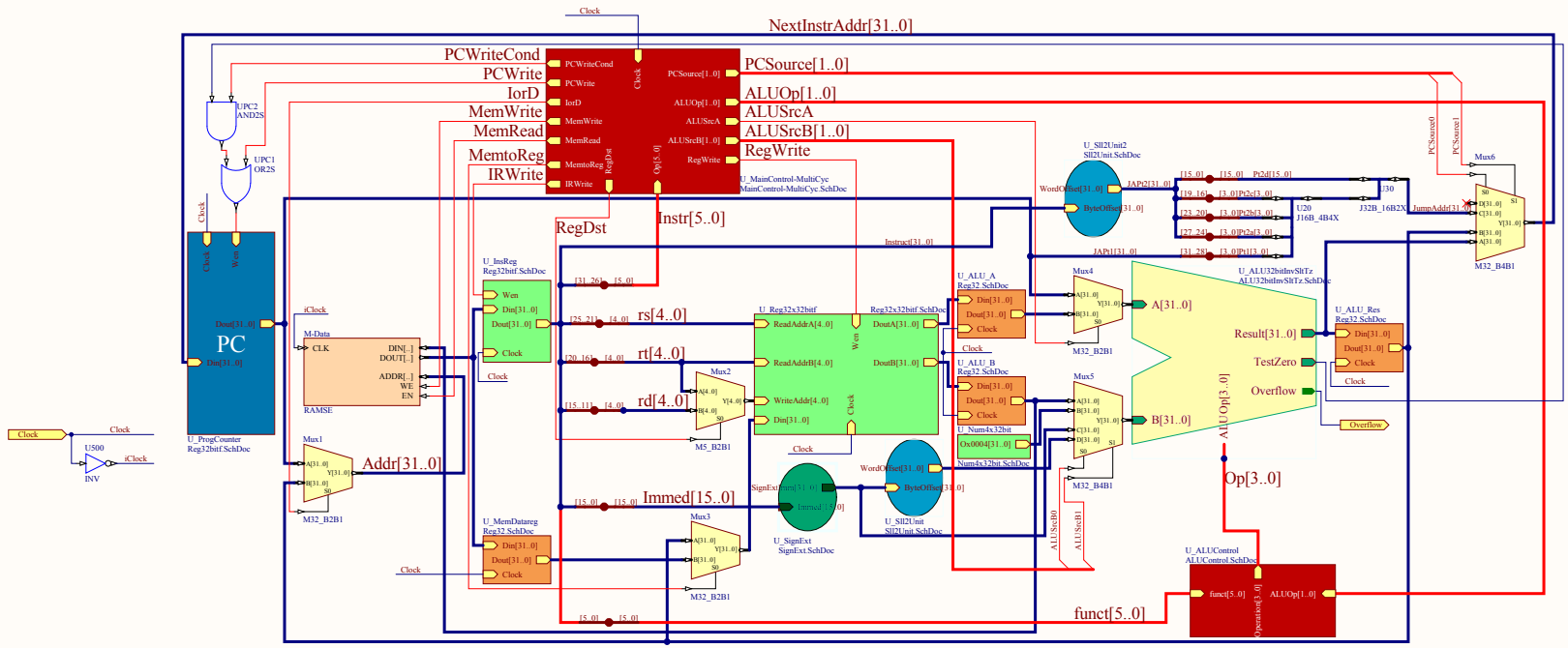


| | | |
|---|---|---|
| Title * Multi-Cycle Implementation | | |
| Size: C | Number: * | Revision: * |
| Date: 15/11/2011 | Time: 10:25:07 PM | Sheet * of * |
| File: C:\Documents and Settings\Hugh\My Documents\Courses\CSE 2021 Computer Architecture\Altium\MultiCycle3.SchDoc | | |